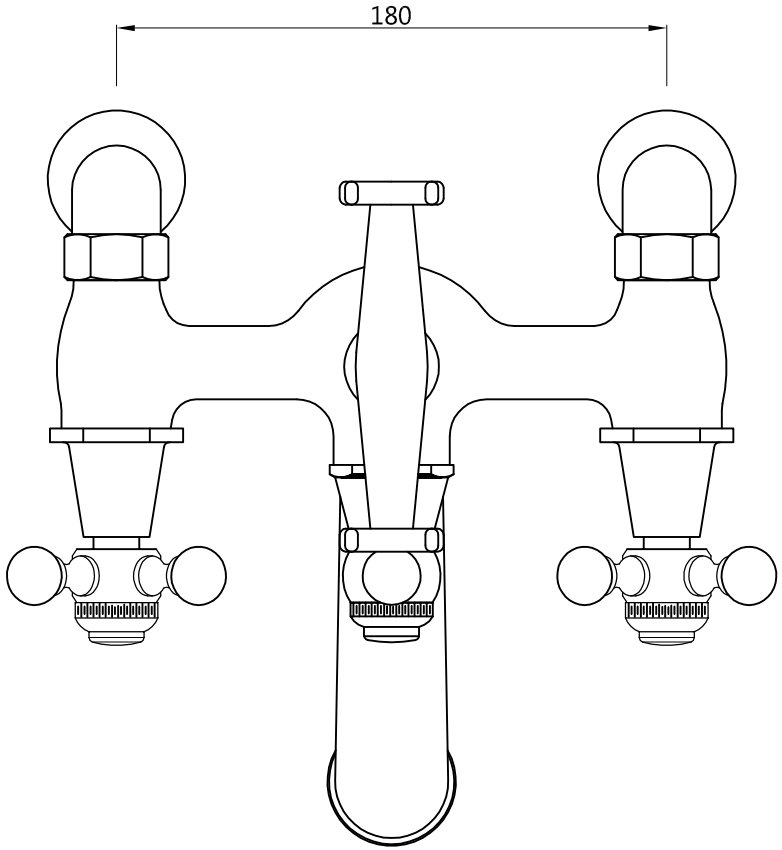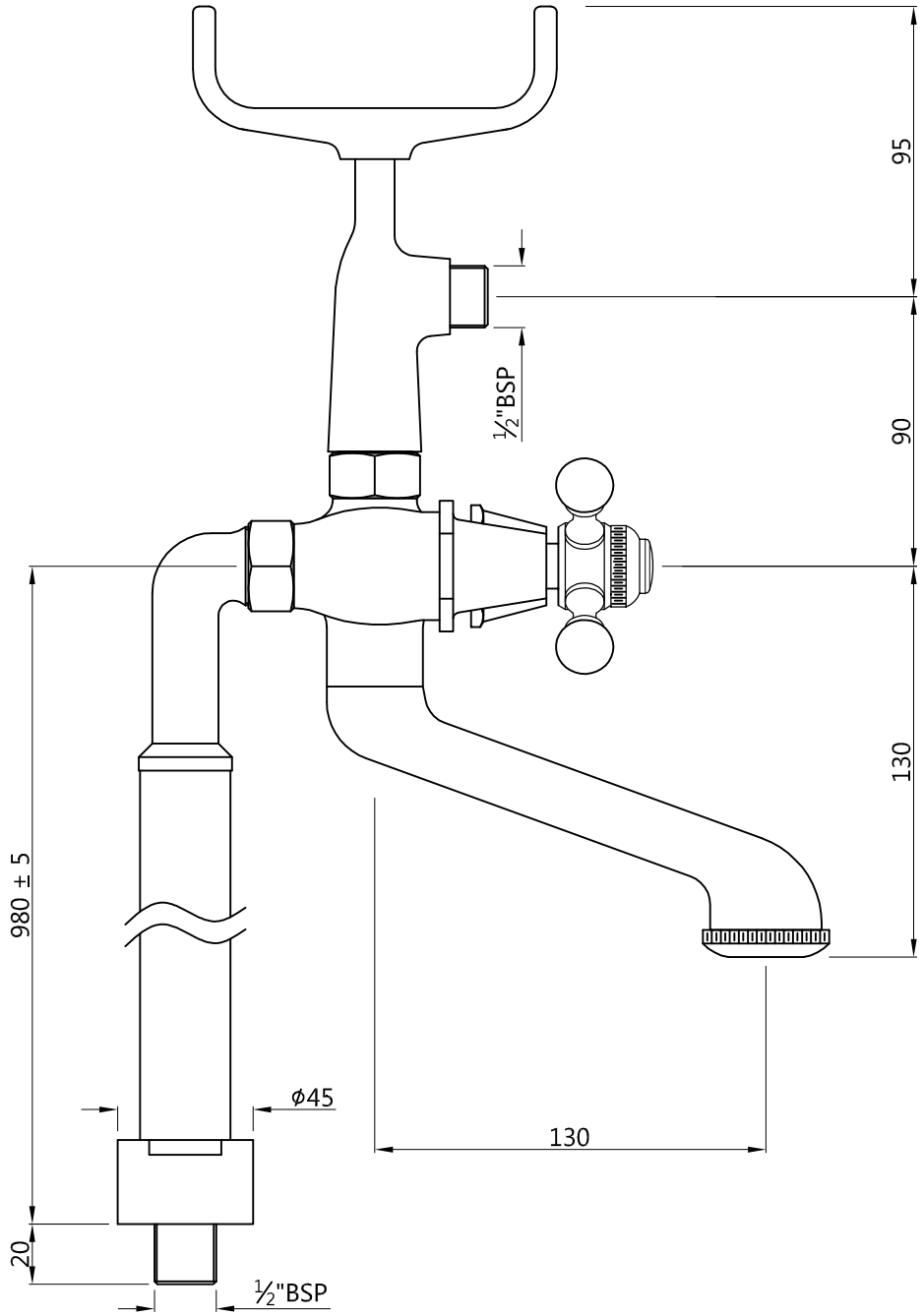Bath and Shower Mixer with Telephonic Shower Crutch and High Rise Legs (without Shower & Shower Hose | Cat. No.-QQT-7271 HL