CNS-WHT-363SPPZ

SPECIFICATION DATA SHEET

PRODUCT DETAILS

Manufacturer :	Jaquar	**Type:**	Complete Set For Extended Wall Hung WC
Colour:	White	**Outlet**	Horizontal
Technical Details:	External diameter of outlet hole dia. Ø 100 ± 5 mm	**Material:**	Ceramic - Vitreous China
	Vertical distance between the Floor and the centre line of the waste outlet hole ≤ 150 mm		

PRODUCT IMAGE

TECHNICAL DRAWING

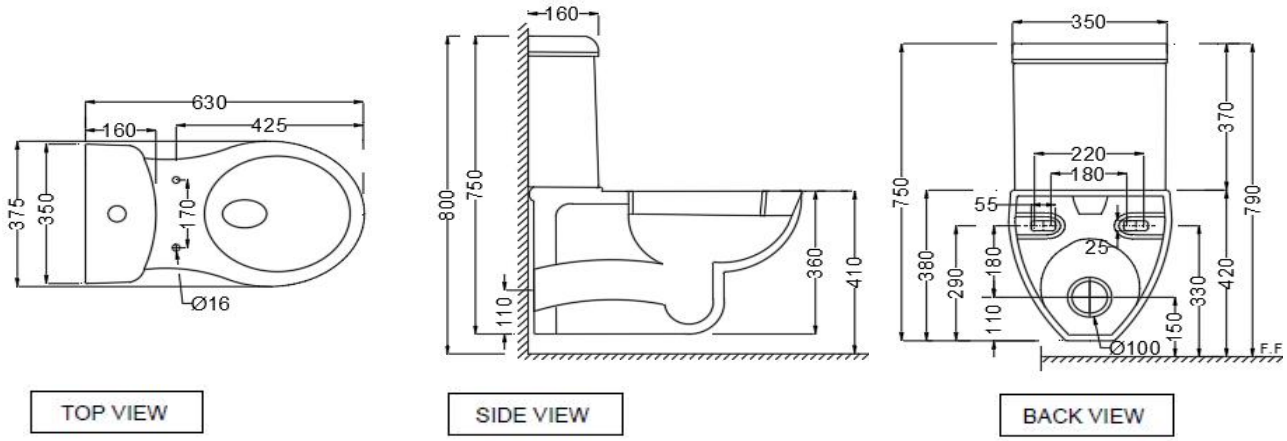

Product Dimension	375x630x750 mm	**FEATURES**
Trap Distance	P-Trap - 150 mm	Box rim , Dual flushing, Dual Flush-2.5/4.5 LPF, Anti germ glaze
Product Weight	31.5 kg	

ACCESSORIES INCLUDED

PP Soft Close Seat cover	CNS-WHT-105S
Cistern	CNS-WHT-215C
Cistern Fittings	ZCF-WHT-FT003
Outlet gasket	ZPS-BLK-GK02

CERTIFICATION

Compliance : EN 997:2012 + A1:2015 (E), SANS 497:2011
All technical dimensions are in accordance to British standards, Bureau of Indian Standards

DISCLAIMER: Our every effort has been made to ensure factual accuracy, the information presented subject to changes due to requirements in different sites, markets and/or countries. All dimensions are in mm (Tolerance ± 5 MM). Jaquar reserves the right to make the necessary amendments at any time without prior notice.