SLS-WHT-6751P180PPZ

SPECIFICATION DATA SHEET

PRODUCT DETAILS

Manufacturer	Jaquar	**Type:**	Complete Set For Coupled WC (P-Trap)
Colour	White	**Outlet**	Horizontal
Technical Details	External diameter of outlet hole Ø100 +5/-2	**Material:**	Ceramic - Vitreous China
	Vertical distance between the Floor and the centre line of the waste outlet hole ≤ 180 mm		

PRODUCT IMAGE

TECHNICAL DRAWING

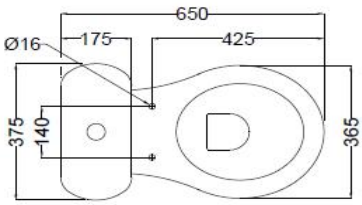

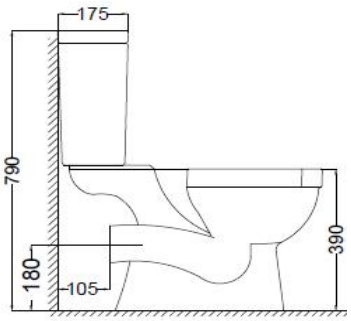

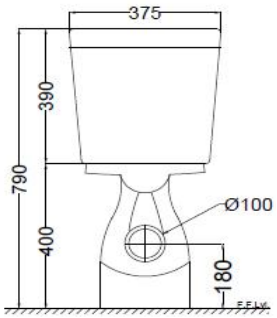

Product Dimension	375x650x790mm	**FEATURES**
Trap Distance	P Trap - 180 mm	Box rim, Dual flushing,Dual Flush-3/6 LPF, Anti germ glaze.
Product Weight	29.70 kg	

ACCESSORIES INCLUDED

PP soft Close seat cover	SLS-WHT-6105PP
Floor fixing screw	ZPS-SNS-FB01
Cistern	SLS-WHT-6201C
Cistern Fittings	ZCF-WHT-FT003

CERTIFICATION

Compliance : EN 997 :2012+A1 2015 (E), SANS 497 : 2011

All technical dimensions are in accordance to British standards, Bureau of Indian Standards

DISCLAIMER: Our every effort has been made to ensure factual accuracy, the information presented subject to changes due to requirements in different sites, markets and/ or countries. All dimensions are in mm (Tolerance ± 5 MM). Jaquar reserves the right to make the necessary amendments at any time without prior notice.